ABS 8 下线检测 End of Line Test Instruction ABS 8		
客户 Customer: 车辆 Vehicles:	**SGMW** **GP50**	GM
系统 System: 制动回路布置类型 Brake split: 驱动型式 Transmission type:	ABS 8 X 型回路布置 X brake split 前轮驱动 Front wheel drive	
诊断 Diagnosis: 通讯类型 Kind of communication: 设备 Equipment:	基于客户的 GMLAN Based on Customer GMLAN 基于 CAN 诊断通讯 Based on CAN diagnosis 滚筒测力计 Roller dynamometer	
”D”		
分发 Distribution:	客户 Customer	

History List:

No.	Date	Pages	Description	Signature
00	04.08.2010	all	1st edition for SGMW GP50 project	Jerico Zhang

	Name	Signature:	Date:
Checked by:	Wang changwei		
Approved by:	Przybyla Benjamin		

©博世保留商标和专利应用在内的所有权力，未经我公司许可不得复制或传递给第三方。

© All rights with Robert Bosch GmbH, including trademark / patent applications. Any right of disposal, as copying and distribution to third parties is ours.

DRAFT

Edition 修改记录

	Modifications:
00	新版本 New Edition

诊断文件 Diagnose Documentation

No	BOSCH – No.	Edition	Date	Name	Vehicle
1	0 265 T12 013	Draft		Functional description of diagnosis 诊断功能描述	VZ

附件 Attachments

No	BOSCH – No.	Name	Vehicle
1	-	液压图 Hydraulic circuit diagrams	-
2	Y 369 B80 067C	电路图 ABS 8 Wiring diagram ABS 8	VZ

DRAFT

©博世保留商标和专利应用在内的所有权力，未经我公司许可不得复制或传递给第三方。

© All rights with Robert Bosch GmbH, including trademark / patent applications. Any right of disposal, as copying and distribution to third parties is ours.

目录 Table of Content:

1 应用 APPLICATION 4

2 流程 PROCEDURE 5

3 过程步骤描述 PROCESS STEP DESCRIPTION 6

3.1 轮速传感器测试（转毂驱动） WHEEL SPEED SENSOR TEST (ROLLS WITH EXTERNAL DRIVE) 6

3.2 ABS 动态测试（4 个独立转毂） ABS DYNAMIC TEST FOR ROLLER DYNAMOMETER WITH 4 INDEPENDENT ROLLERS 13

3.2.1 概述 General description 13

3.2.2 ABS 动态测试图表 ABS Dynamic test diagram 16

3.2.3 ABS 动态测试液压功能图 Schematic Diagram of ABS Dynamic Test Hydraulic Functions 18

4 测试步骤和命令描述 TEST STEP AND COMMANDS DESCRIPTION 21

4.1 建立通讯 COMMUNICATION SET UP 21

4.2 开始诊断模式 START DIAGNOSTIC SESSION ..... **ERROR! BOOKMARK NOT DEFINED.**

4.3 电子控制单元识别 ECU-IDENTIFICATION 22

4.4 读取故障码 READ FAULT CODE MEMORY 22

4.5 检查加注字节 CHECK PROCESS BYTE 24

4.6 检查系统状态 CHECK SYSTEM STATUS 25

4.7 开始轮速传感器测试 START OF WHEEL SPEED SENSOR TEST 26

4.8 评估轮速传感器测试 EVALUATION OF THE WHEEL SPEED SENSOR TEST 27

4.9 禁用速度限制和阀组继电器关闭 SPEED LIMITED AND VALVE RELAY SHUT DOWN DEACTIVATION 26

4.10 ABS 动态测试 DYNAMIC TEST OF ABS 28

4.11 写入过程控制字节 WRITE PROCESS CONTROL BYTE 30

4.12 读取故障码 READ FAULT CODE MEMORY ..... **ERROR! BOOKMARK NOT DEFINED.**

4.13 清楚故障码 CLEAR FAULT CODE MEMORY 31

4.14 报警灯测试 WARNING LIGHT TEST 31

4.15 激活速度限制和阀组继电器关闭 SPEED LIMITED AND VALVE RELAY SHUT DOWN ACTIVATION ..... **ERROR! BOOKMARK NOT DEFINED.**

4.16 结束测试 END OF TEST 31

5 阀保护措施 VALVE PROTECTIVE MEASURES 32

6 测试设备信息 TEST RIG INFORMATION 33

7 附件 ATTACHMENTS 35

7.1 ABS 8 X 型回路液压图 ABS 8 WITH X BRAKE SPLIT CIRCUIT HYDRAULIC CIRCUIT DIAGRAMS 35

7.2 ZOTYE M ABS 8 电路图 ZOTYE M ABS 8 WIRING DIAGRAMS 36

©博世保留商标和专利应用在内的所有权力，未经我公司许可不得复制或传递给第三方。

© All rights with Robert Bosch GmbH, including trademark / patent applications. Any right of disposal, as copying and distribution to third parties is ours.

1 应用 application

为确保博世防抱死制动系统能正常工作，本文描述了博世推荐的正确测试方法和车辆装配后的接口定义。

该测试以 KWP2000 诊断和相应的功能为基础，可采用两轴式制动转毂试验台。测试所有采用的都是只读存储程序。
客户/车辆特定的“诊断功能说明”适当的版本，提供了诊断及其使用特性的操作和功能信息。

This document describes test steps which are recommended to ensure the correct function of the Bosch ABS system and its interfaces after the vehicle assembly.

The tests are based on KWP2000 diagnosis. The dynamic tests are carried out using a 2-axle brake dynamometer. All used tests are ROM resident functions. The appropriate version of the customer/vehicle specific “Functional description of diagnosis” provides information on the handling and function of the diagnosis.

对客户提供的测试设备的要求 Requirements for the test facilities:
- 与博世电子控制单元的通信 Communication with the Bosch ECU
- 测试序列的控制 Control of the test sequence
- 测力计的控制 Control of the dynamometer
- 测试数据的评估 Evaluation of the test data
- 发布流程协议 Issue test protocol

备注：
优化测试步骤和测试时序来满足较短的循环时间，避免系统的双重检测。
如果在车辆上执行除防抱死制动系统下线检测的其他动态功能检测，防抱死制动系统将被激活或由于某种被测错误造成的系统失效。
Note:
The test steps and the test timing is optimized in order to meet a short cycle time and to avoid double checks of the system.
If dynamic functional tests other than the ABS end of line test are performed on the vehicle the ABS could be activated or the system disabled due to error detection.

DRAFT

©博世保留商标和专利应用在内的所有权力，未经我公司许可不得复制或传递给第三方。

© All rights with Robert Bosch GmbH, including trademark / patent applications. Any right of disposal, as copying and distribution to third parties is ours.

2 流程 Procedure

所有的博世防抱死制动系统部件，如电子控制单元，液压调节模块，轮速传感器，在运输到客户装配生产厂前都单独在博世装配线上检测过。
整个系统包括汽车的接口，仪表盘的指示灯和供电电源在客户工厂第一时间组装，检测连线和功能是否正确。
电子控制单元能执行许多复杂的自我监控软件，例如连续和偶然性测试，并且在有错误的情况下识别这些错误和储存错误代码号下线检测用这个特性来读出错误代码，为修理工作提供错误识别信息
然而，有些错误不能被电子控制单元本身检测（例如液压管路或轮速传感器的交叉连接和一些输入信号的恰当的机能如制动灯开关）。为了找到这些错误，当车辆休息时应该进行静态测试，并且在测力计进行动态测试。
测试的主要内容是检测：
- 所有电子控制单元的输入输出信号功能是否正确
- 所有轮速传感器的功能是否正确（信号质量和相关性）
- 所有阀和液压部件的功能是否正确（功能和相关性）

ABS 8 液压处理模块以干燥状态（无制动液）提交给客户。因此它需要使用阀和泵马达的相应的诊断来在线上抽真空和加注为了保证正确的过程，需要把一个加注字节 存储到电子控制单元的 EEPROM 内。抽真空加注设备可以存储这个字节的值，并且该值可以在下线检测中查出验证先前的过程。
设计的整个测试过程涵盖了系统的所有重要内容并且最大程度上缩短了测试时间。

All The Bosch ABS components, such as ECU, hydraulic modulator, wheel speed sensors, are checked individually in the Bosch assembly line prior to shipment to the customers assembly plants.
The entire system including harnesses, dashboard lights and power supply of the vehicle is assembled the first time at the customer plant and must be checked for proper connections and functions.
The ECU is capable to run a number of complexity self monitoring software features, such as continuity and plausibility checks and in case of errors to identify these faults and to store fault code numbers.
This feature is used at the end of line test by reading out the fault codes as error identification as well as information for repair works.
However, some of the failures can not be detected by the ECU itself (such as cross connections of hydraulic pipes or wheel speed sensors and correct functioning of some input signals, i.e. brake light switch). In order to find these failures static or dynamic tests should be performed while the vehicle is at rest or during a dynamic test on a dynamometer.
The major items of this test steps is to check for:
- correct functioning of all input and output signals of the ECU
- correct functioning of all wheel speed sensors (signal quality and correlation)
- correct functioning of all valves and hydraulic components (functioning and correlation)

The ABS 8 hydraulic modulator is shipped to the customer in a dry state (no brake fluid). Therefore it needs to be evacuated and filled on line by using diagnosis for valve and pump motor activation's. To ensure the proper process, a process byte can be stored in the EEPROM of the ECU. The value of the byte is stored by the evac/fill or bleed equipment and can be checked at the end of line test to verify the previous processes.
The entire test procedure is designed to cover all the important items of the system and to minimize the testing time.

©博世保留商标和专利应用在内的所有权力，未经我公司许可不得复制或传递给第三方。

© All rights with Robert Bosch GmbH, including trademark / patent applications. Any right of disposal, as copying and distribution to third parties is ours.

3 过程步骤描述 Process Step Description

3.1 轮速传感器测试（转毂驱动） Wheel Speed Sensor Test (rolls with external drive)

本文件描述了两种方式进行传感器的相关性测试：
1. 转毂顺序转动
2. 转毂各自以不同速度转动，可以减少时间但需要转毂支持
This document described two versions for the wheel speed sensor test corresponding of the exist test bench. One kind of wheel speed sensor should be used.
Version 1: All roller pairs will be actuate one after the other
Version 2: The second solution allows a shorter process time but a test bench is needed with the ability to drive the roller pairs together with different speed values.

方式一： **Version 1:**

轮速传感器测试（相关性和信号质量检测；方式一） Wheel speed sensor test (correlation and signal quality check; Version 1)				
Test bench:		ECU data:		Requested data:
Roll front left Roll front right Roll rear left Roll rear right	On; 5 km/h Off; 0 km/h Off; 0 km/h Off; 0 km/h	Wheel FL: min/max Wheel FR: min/max Wheel RL: min/max Wheel RR: min/max	xx km/h xx km/h xx km/h xx km/h	4,5 km/h < xx < 5,5 km/h 0,0 km/h < xx < 1,0 km/h 0,0 km/h < xx < 1,0 km/h 0,0 km/h < xx < 1,0 km/h
Roll front left Roll front right Roll rear left Roll rear right	On; 5 km/h On; 5 km/h Off; 0 km/h Off; 0 km/h	Wheel FL: min/max Wheel FR: min/max Wheel RL: min/max Wheel RR: min/max	xx km/h xx km/h xx km/h xx km/h	4,5 km/h < xx < 5,5 km/h 4,5 km/h < xx < 5,5 km/h 0,0 km/h < xx < 1,0 km/h 0,0 km/h < xx < 1,0 km/h
Roll front left Roll front right Roll rear left Roll rear right	On; 5 km/h On; 5 km/h On; 5 km/h Off; 0 km/h	Wheel FL: min/max Wheel FR: min/max Wheel RL: min/max Wheel RR: min/max	xx km/h xx km/h xx km/h xx km/h	4,5 km/h < xx < 5,5 km/h 4,5 km/h < xx < 5,5 km/h 4,5 km/h < xx < 5,5 km/h 0,0 km/h < xx < 1,0 km/h
Roll front left Roll front right Roll rear left Roll rear right	On; 5 km/h On; 5 km/h On; 5 km/h On; 5 km/h	Wheel FL: min/max Wheel FR: min/max Wheel RL: min/max Wheel RR: min/max	xx km/h xx km/h xx km/h xx km/h	4,5 km/h < xx < 5,5 km/h 4,5 km/h < xx < 5,5 km/h 4,5 km/h < xx < 5,5 km/h 4,5 km/h < xx < 5,5 km/h
Roll front left Roll front right Roll rear left Roll rear right	On; 5 km/h On; 5 km/h On; 5 km/h On; 5 km/h	Wheel FL: min/max Wheel FR: min/max Wheel RL: min/max Wheel RR: min/max	xx km/h xx km/h xx km/h xx km/h	4,5 km/h < xx < 5,5 km/h 4,5 km/h < xx < 5,5 km/h 4,5 km/h < xx < 5,5 km/h 4,5 km/h < xx < 5,5 km/h

©博世保留商标和专利应用在内的所有权力，未经我公司许可不得复制或传递给第三方。

© All rights with Robert Bosch GmbH, including trademark / patent applications. Any right of disposal, as copying and distribution to third parties is ours.

备注：
这里所列的数据值仅供参考，最终数据值需制造商通过试验来确定。
为了检测传感器的相关性（连接传感器与相应的车轮），测试设备逐一地开启各个车轮。测试速度必须匹配测力计设计（如测试速度为5千米/小时）。
测试设备记录了来自电子控制单元的轮速数据并验证这些信号。
在测试信号质量时，所有的车轮开启（相关性测试一结束进行）。
电子控制单元运行内部线程，记录至少一次旋转的所有传感器的数据，存储测试期间的最小最大的速度数据，并在测试完成以后输出数据给测试设备。
测试实验台计算机评估这些数据，与内部界定数据比较。

传感器错误测出 ⇒ 错误消息，继续
没有错误测出 ⇒ 继续

Remarks:
The speed of the min/max values are proposals and should be defind by trails of the manufacturer.
To check the correlation of the sensors (connection of sensor to the corresponding wheel), the test rig turns on the individual rolls one after the other. The test speed must be adapted to the dynamometer design. (e.g. test speed = 5 km/h).
The tester records the wheel speed data received from the ECU and verifies the signals.
During the signal quality test, all rolls will be turned on (this step will be executed immediately after the correlation test).
The ECU runs an internal routine that records all sensor data over at least one revolution, stores the minimum and maximum speed data of each wheel during the test time and outputs these data to the tester after the test has been finished.
The test bench computer evaluates these data and compares them with internal limit data.

Sensor failure detected ⇒ Failure message, continue
No failures detected ⇒ Continue

轮速传感器误差计算：
Bosch 建议允许公差： 10%

For calculation of the allowed WSS tolerance:
V rolls = 5km/h
WSSmin = 5km/h – 10% = 4,5 km/h
WSSmax =5km/h + 10% = 5,5 km/h

Bosch recommend tolerance: 10%

这里的误差计算考虑到胎压的影响，测试台和 ECU 的误差影响，最终的公差值应充分考虑上述影响，由客户通过试验来确定。

The given tolerances are calculated concerning of tyre pressure, tolerance of the test bench and the ECU electrical circuit tolerance. The valid tolerance must be found and confirmed by trials at the customer.

©博世保留商标和专利应用在内的所有权力，未经我公司许可不得复制或传递给第三方。

© All rights with Robert Bosch GmbH, including trademark / patent applications. Any right of disposal, as copying and distribution to third parties is ours.

方式一测试图表： Version 1 Test diagram:

轮速传感器测试（安装位置，相关性和信号质量检测）
Wheel speed sensor test (mounting position, correlation and signal quality check)

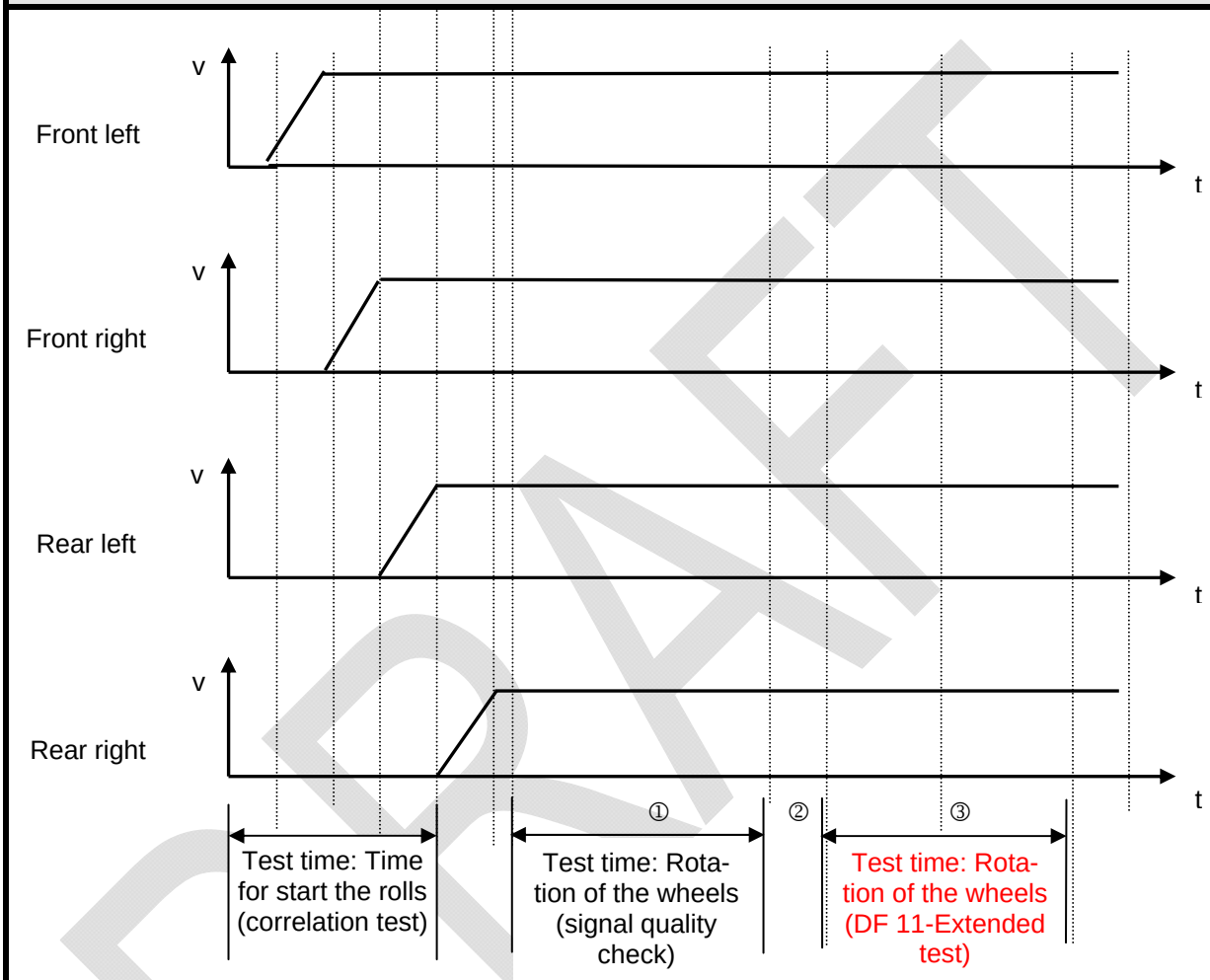

备注：
这个实验台通过外部逐步驱动开启各个车轮的同时测试设备请求传感器的速度数据，检测正确的相关性。然后测试设备检测全部车轮至少一周旋转的传感器质量，评估传感器信号在某一个范围。电子控制单元每 10 毫秒提高任意一个传感器速度，为了识别有关传感器，带齿的车轮，气隙或偏离的错误，存储并输出速度数据的最大最小值（在测试期间）。

Remarks:
The test rig turns on the individual rolls by external drives step by step while the tester request the speed data of the sensors and checks the correct correlation. The tester then runs a function that checks the sensor quality over a minimum of one revolution for all wheels and evaluates whether the speeds are within a certain limit, The ECU internally picks up each sensor speed every 10 ms, stores and outputs the minimum and maximum speed data (within the test time) in order to identify faults of the sensor, toothed wheels, air gaps or eccentricities.

©博世保留商标和专利应用在内的所有权力，未经我公司许可不得复制或传递给第三方。

© All rights with Robert Bosch GmbH, including trademark / patent applications. Any right of disposal, as copying and distribution to third parties is ours.

方式二： Version 2:

轮速传感器测试（相关性和信号质量检测；方式二） Wheel speed sensor test (correlation and signal quality check; Version 2)				
Test stand:		ECU data:		Requested data:
Roll front left Roll front right Roll rear left Roll rear right	On; 3 km/h On; 6 km/h On: 9 km/h On; 12 km/h	Wheel FL : min/max Wheel FR : min/max Wheel RL : min/max Wheel RR : min/max	xx km/h xx km/h xx km/h xx km/h	2,7 km/h < xx < 3,3 km/h 5,4 km/h < xx < 6,6 km/h 8,1 km/h < xx < 9,9 km/h 10,8 km/h < xx < 13,2 km/h

备注：
每对转毂的最大最小速度应通过试验来确定。
为了检测传感器的相关性（连接传感器与相应的车轮）和信号的质量，转毂各自分别转动，速度应和设备相适应，例如：3，6，9，12 km/h。
设备应记录下 ECU 发出来的各轮的速度值并检验，在测试中所有转毂都是转动的。
电子控制单元运行内部线程，记录至少一次旋转的所有传感器的数据，存储测试期间的最小最大的速度数据，并在测试完成以后输出数据给测试设备。
测试实验台计算机评估这些数据，与内部界定数据比较。

传感器错误测出 ⇒ 错误消息，继续
没有错误测出 ⇒ 继续

Remarks:
The speed of the once roller pairs and the min/max values are proposals and should be defined by trails of the manufacturer.
To check the correlation (connection of sensor to the corresponding wheel) and signal quality of the sensors, the test rig turns on the individual rolls together. The test speed must be adapted to the dynamometer design, e.g. test speed = 3, 6, 9, 12 km/h.
The tester records the wheel speed data received from the ECU and verifies the signals.
During the test, all rolls will be turned on.
The ECU runs an internal routine that records all sensor data at one revolution, stores the minimum and maximum speed data of each wheel during the test time and outputs these data to the tester after the test has been finished.
The test bench computer evaluates these data and compares them with internal limit data.

Sensor failure detected ⇒ Failure message, continue
No failures detected ⇒ Continue

©博世保留商标和专利应用在内的所有权力，未经我公司许可不得复制或传递给第三方。

© All rights with Robert Bosch GmbH, including trademark / patent applications. Any right of disposal, as copying and distribution to third parties is ours.

方式二测试图表： Version 2 Test diagram:

轮速传感器测试（相关性和信号质量检测）
Wheel speed sensor test (correlation and signal quality check)

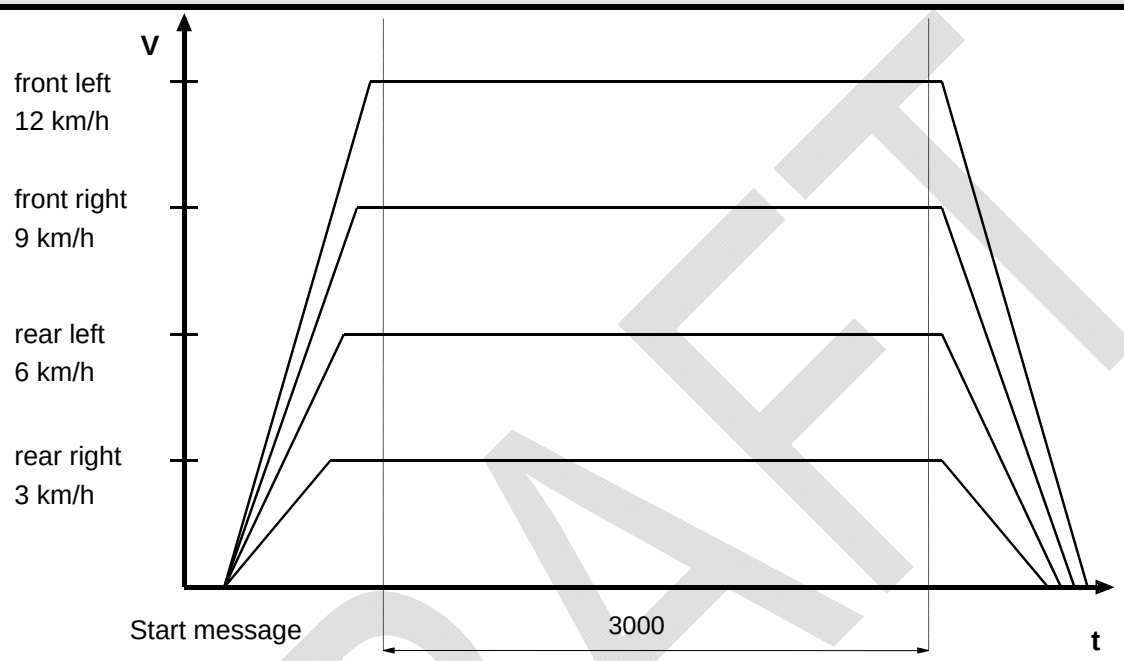

Signal quality and correlation check one rotation of the wheels
The values are examples und must be defined by the customer

备注：
这个实验台通过外部以不同速度驱动开启各个车轮的同时测试设备请求传感器的速度数据，检测正确的相关性。然后测试设备检测全部车轮至少一周旋转的传感器质量，评估传感器信号在某一个范围。电子控制单元每 10 毫秒提高任意一个传感器速度，为了识别有关传感器，带齿的车轮，气隙或偏离的错误，存储并输出速度数据的最大最小值（在测试期间）。

Remarks:
The test rig turns on the individual rolls by external drives with a different speed while the tester request the speed data.
The test check the correct allocation of the wires with the corresponding sensors and checks the sensor quality over a minimum of one revolution for all wheels and evaluates whether the speeds are within a certain limit. The ECU internally picks up each sensor speed every 10 ms, stores and outputs the minimum and maximum speed data (within the test time) in order to identify faults of the sensor, toothed wheels, air gaps or eccentricities.

如果车轮速度超过 10km/h，ECU 将无法进入客户生产线诊断模式，没有任何响应。
如果是以低于 10km/h 开始的，可以继续进行，即使速度增加超过 10km/h。
如果速度超过 10km/h，可以关闭速度限制来进行测试。
If the vehicle speed is more than 10Km/h, the ECU can not change into the Customer Plant Diagnostic mode and does not respond to any request. If the Customers Plant Diagnostic mode is started with a speed which is lower than 10 Km/h, it will leave it, if the speed increases to more than 10 Km/h.

©博世保留商标和专利应用在内的所有权力，未经我公司许可不得复制或传递给第三方。

© All rights with Robert Bosch GmbH, including trademark / patent applications. Any right of disposal, as copying and distribution to third parties is ours.

The speed limit must be deactivated if speed increase to more than 10 Km/h.

DRAFT

©博世保留商标和专利应用在内的所有权力，未经我公司许可不得复制或传递给第三方。

© All rights with Robert Bosch GmbH, including trademark / patent applications. Any right of disposal, as copying and distribution to third parties is ours.

信号质量测试（以一个车轮的为例）Signal quality test (example of one wheel):

信号质量测试（以一个车轮的为例）Signal quality test (example of one wheel):

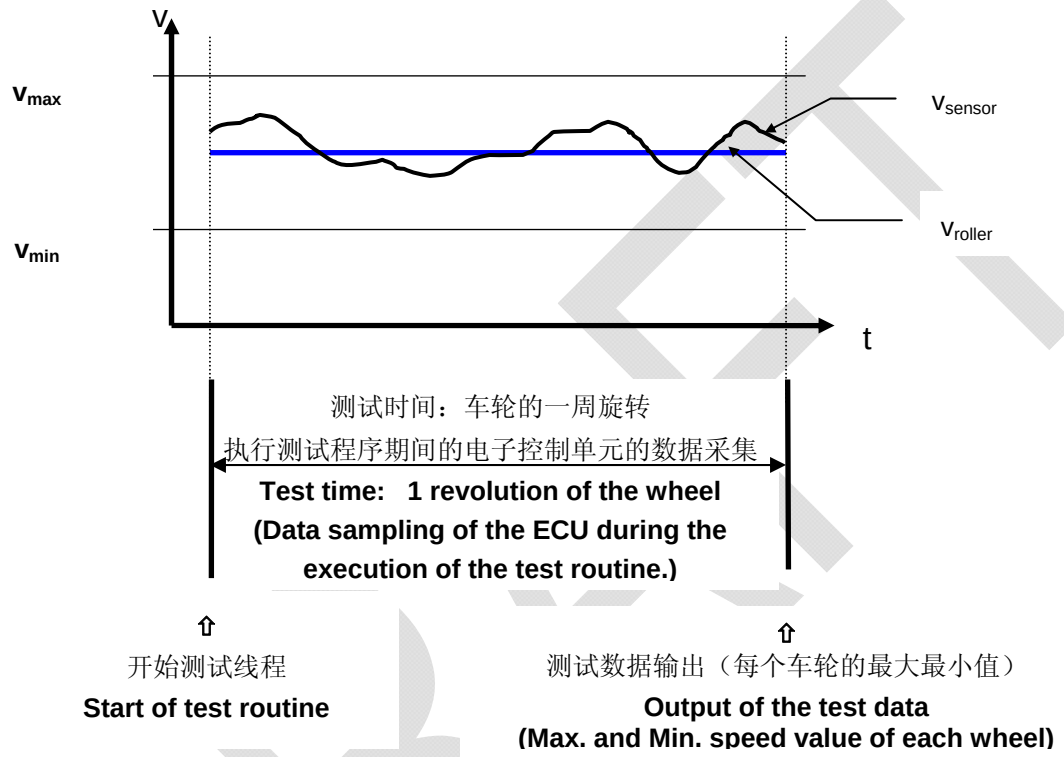

备注:
开始线程后，电子控制单元在执行期间连续采集所有轮速数据，检测最大最小值。
此数据传输于测试设备（对每个车轮而言）。
测试设备必须评估这些数据并匹配与限定界限。
此界限定义为满足轮速信号的技术规定公差。
轮速公差必须最小。
测试速度必须满足轮速传感器的最小速度。

Remarks:
After the routine has been started, the ECU will continuously sample all wheel speed data and check for the minimum and the maximum value during the execution time.
This data (for each wheel) is transmitted to the test equipment.
The test equipment must evaluate this data and compare with given limits.
The limits are defined to meet the specified tolerances of the wheel speed signals.
The tolerance of the roller speed must be minimized.
The test speed must be adapted onto the minimum specified speed of the wheel speed sensors.

©博世保留商标和专利应用在内的所有权力，未经我公司许可不得复制或传递给第三方。

© All rights with Robert Bosch GmbH, including trademark / patent applications. Any right of disposal, as copying and distribution to third parties is ours.

3.2 ABS 动态测试（4 个独立转毂） ABS dynamic test for roller dynamometer with 4 independent rollers

3.2.1 概述 General description

ABS 动态测试 (电磁阀功能测试和阀体关系测试) Dynamic ABS Test (Solenoid valve functional test and valve correlation test)				
操作员：Operator:	测试设备： Test Rig:	制动力（牛顿）： Brake Force (N):		要求值（牛顿）： Demand Data (N):
实施制动 Apply Brake Pedal	对所有轮实施制动 Pressure apply on all 4 wheels 测量制动力 Measure Brake Forces	前左轮 Wheel FL: 前右轮 Wheel FR: 后左轮 Wheel RL: 后右轮 Wheel RR:	xx N xx N xx N xx N	1500 N < F < 2000 N 1500 N < F < 2000 N 1000 N < F < 1500 N 1000 N < F < 1500 N
保持制动踏板恒定 Keep Brake Pedal constant	解除所有轮制动力 Release all wheels	前左轮 Wheel FL: 前右轮 Wheel FR: 后左轮 Wheel RL: 后右轮 Wheel RR:	xx N xx N xx N xx N	0 N < F < 200 N 0 N < F < 200 N 0 N < F < 200 N 0 N < F < 200 N
保持制动踏板恒定 Keep Brake Pedal constant	增加前左轮制动力 Pressure Increase FL 测量制动力 Measure Brake Forces	前左轮 Wheel FL: 前右轮 Wheel FR: 后左轮 Wheel RL: 后右轮 Wheel RR:	xx N xx N xx N xx N	1000 N < F 0 N < F < 200 N 0 N < F < 200 N 0 N < F < 200 N
保持制动踏板恒定 Keep Brake Pedal constant	增加前右轮制动力 Pressure Increase FR 测量制动力 Measure Brake Forces	前左轮 Wheel FL: 前右轮 Wheel FR: 后左轮 Wheel RL: 后右轮 Wheel RR:	xx N xx N xx N xx N	1000 N < F 1000 N < F 0 N < F < 200 N 0 N < F < 200 N
保持制动踏板恒定 Keep Brake Pedal constant	解除前左轮制动力 Pressure Release FL 测量制动力 Measure Brake Forces	前左轮 Wheel FL: 前右轮 Wheel FR: 后左轮 Wheel RL: 后右轮 Wheel RR:	xx N xx N xx N xx N	0 N < F < 400 N 1000 N < F 0 N < F < 200 N 0 N < F < 200 N
保持制动踏板恒定 Keep Brake Pedal constant	增加后左轮制动力 Pressure Increase RL 测量制动力 Measure Brake Forces	前左轮 Wheel FL: 前右轮 Wheel FR: 后左轮 Wheel RL: 后右轮 Wheel RR:	xx N xx N xx N xx N	0 N < F < 400 N 1000 N < F 800 N < F 0 N < F < 200 N
保持制动踏板恒定 Keep Brake Pedal constant	解除前右轮制动力 Pressure Release FR 测量制动力 Measure Brake Forces	前左轮 Wheel FL: 前右轮 Wheel FR: 后左轮 Wheel RL: 后右轮 Wheel RR:	xx N xx N xx N xx N	0 N < F < 400 N 0 N < F < 400 N 800 N < F 0 N < F < 200 N
保持制动踏板恒定 Keep Brake Pedal constant	增加后右轮制动力 Pressure Increase RR 测量制动力 Measure Brake Forces	前左轮 Wheel FL: 前右轮 Wheel FR: 后左轮 Wheel RL: 后右轮 Wheel RR:	xx N xx N xx N xx N	0 N < F < 400 N 0 N < F < 400 N 800 N < F 800 N < F

DRAFT

©博世保留商标和专利应用在内的所有权力，未经我公司许可不得复制或传递给第三方。

© All rights with Robert Bosch GmbH, including trademark / patent applications. Any right of disposal, as copying and distribution to third parties is ours.

保持制动踏板恒定 Keep Brake Pedal constant	解除后左轮制动力 Pressure Release RL 测量制动力 Measure Brake Forces	前左轮 Wheel FL: 前右轮 Wheel FR: 后左轮 Wheel RL: 后右轮 Wheel RR:	xx N xx N xx N xx N	0 N < F < 400 N 0 N < F < 400 N 0 N < F < 250 N 800 N < F
保持制动踏板恒定 Keep Brake Pedal constant	解除后右轮制动力 Pressure Release RR 测量制动力 Measure Brake Forces	前左轮 Wheel FL: 前右轮 Wheel FR: 后左轮 Wheel RL: 后右轮 Wheel RR:	xx N xx N xx N xx N	0 N < F < 400 N 0 N < F < 400 N 0 N < F < 250 N 0 N < F < 250 N
放开制动踏板 Release Brake Pedal	回复阀门状态 Deactivate valves			0 N < F < 200 N 0 N < F < 200 N 0 N < F < 200 N 0 N < F < 200 N

备注:
为防止阀体过热，在抽真空加注或排气后至少 5 分钟后才能进行动态测试。
在动态过程中的注意事项：
在 ABS 8 主动防护的软件中阀组保护关闭功能应提前单独应用以适应阀体连续工作超过 30 秒。
必须确保测试程序正确。
在测试过程中应保证阀组继电器不能关闭。在一些动态测试中可能会有某个轮子制动力突然升高的情况，那是因为阀组继电器打开锁导致的，所以需保证它不能打开。

当动态测试结束后，应再次启动监控：
1. 禁用阀组继电器关闭
2. 执行动态测试
3. 启用阀组继电器关闭

如测试的速度超过 10km/h 则测试时应取消速度限制。
当所有的轮子都转动时，操作员应一直实施制动力。
测试设备测量制动力，在分别的泄压和恢复过程中测量制动力值来验证阀体功能和阀体关系是否正确。
在试验过程中操作员应该保持制动踏板恒定。
阀体的激励时间和制动力的测量时间必须与测力计和车的配置相匹配。
评价可以采用测量制动力或转毂的减速度，也可以是车轮的减速度。
在基础制动测试完成时所有的进液阀都是关闭的。
在动态测试过程中测试软件顺序开启相应阀门实现增压减压的循环。
ECU 记录数据并可以传给测试设备进行进一步的评估。
为节省时间，各轮的测试是交叠进行的。
所涉及到的门限值均应是与车辆相关的经验值，所列数据仅供参考。

ABS 动态测试通过 ⇒ 继续
ABS 动态测试不通过 ⇒ 记录错误信息，继续

Remarks:
To prevent a overheating of the coils it is necessary to wait a minimum time of 5 minutes after the evac/fill process or repair bleeding process until the start of the function base brake and dynamic test.
At the execution of the dynamic test there is something to note:

©博世保留商标和专利应用在内的所有权力，未经我公司许可不得复制或传递给第三方。

© All rights with Robert Bosch GmbH, including trademark / patent applications. Any right of disposal, as copying and distribution to third parties is ours.

As a result of the active safety software at ABS 8 the function “valve relay shut down deactivate” and optional (in case of a necessary, continuous actuation time of the valves longer than 30s) have to be switched off before the execution of the dynamic test with a separate service.
This is necessary to guarantee a correct course of the test.
The valve relay may not switch off during the dynamic test. In some dynamic tests of the manufacturer there could be a sudden rise of the brake pressure in the wheels as a result of a problem and thereby in connection a drop of the valve relay. Therefore it is necessary to switch off the valve relay monitoring to prevent such a possible drop.

After the execution of the dynamic test it is necessary to activate the monitoring again.
1. Valve Relay shut down deactivation
2. Execution of the dynamic test
3. Valve Relay shut down activation

The speed limit should be deactivated when test speed more than 10 km/h.
The operator must keep the brake pedal constant during the entire execution of the test.
The base brake test is defined to check the performance of the foundation brake system.
The operator must apply the brake pedal to initiate a sufficient deceleration of the wheels and must keep the brake pedal constant for the entire test.
The evaluation can be done by measuring the brake forces or deceleration rates of the rollers. It can also be done by evaluating the deceleration rates of the wheels out of the ECU data.
The dynamic test is designed to check the correct correlation, function and tightness of the valves and the correlation of the wheel speed sensors.
At the end of the base brake test the inlet valves are switched to pressure hold.
The tester software turns the individual valves into pressure release and pressure increase cycles during the dynamic test.
This deceleration rates are measured by the ECU and transmitted to the tester for further evaluation and comparison with given limits.
In order to minimize the total cycle time of this test step, the individual wheel cycles are overlapped.
The timing of valve actuation and deceleration measuring times must be adapted onto the dynamics of the dynamometer and the vehicle configuration.

The limits of the deceleration rates must be set according to the given measuring times and the deceleration rates out of the base brake test as a reference of the initial brake apply, all data only for reference.

Dynamic ABS Test OK	⇒	Continue
Dynamic ABS Test NOK	⇒	Failure message, continue

©博世保留商标和专利应用在内的所有权力，未经我公司许可不得复制或传递给第三方。

© All rights with Robert Bosch GmbH, including trademark / patent applications. Any right of disposal, as copying and distribution to third parties is ours.

3.2.2 ABS 动态测试图表 ABS Dynamic test diagram

DRAFT

©博世保留商标和专利应用在内的所有权力，未经我公司许可不得复制或传递给第三方。

© All rights with Robert Bosch GmbH, including trademark / patent applications. Any right of disposal, as copying and distribution to third parties is ours.

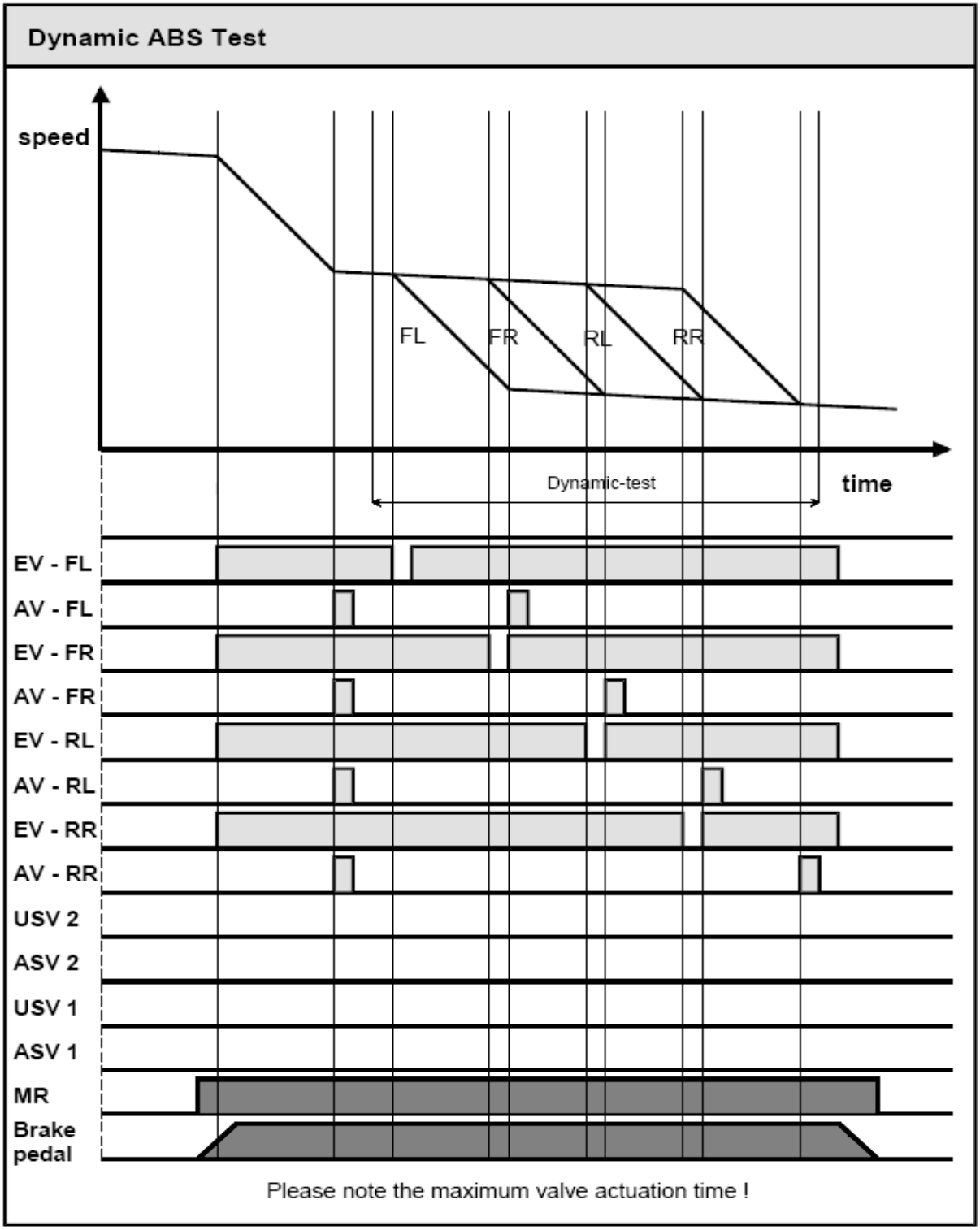

©博世保留商标和专利应用在内的所有权力，未经我公司许可不得复制或传递给第三方。

© All rights with Robert Bosch GmbH, including trademark / patent applications. Any right of disposal, as copying and distribution to third parties is ours.

3.2.3 ABS 动态测试液压功能图 Schematic Diagram of ABS Dynamic Test Hydraulic Functions

增压 Function Pressure apply (increase function)

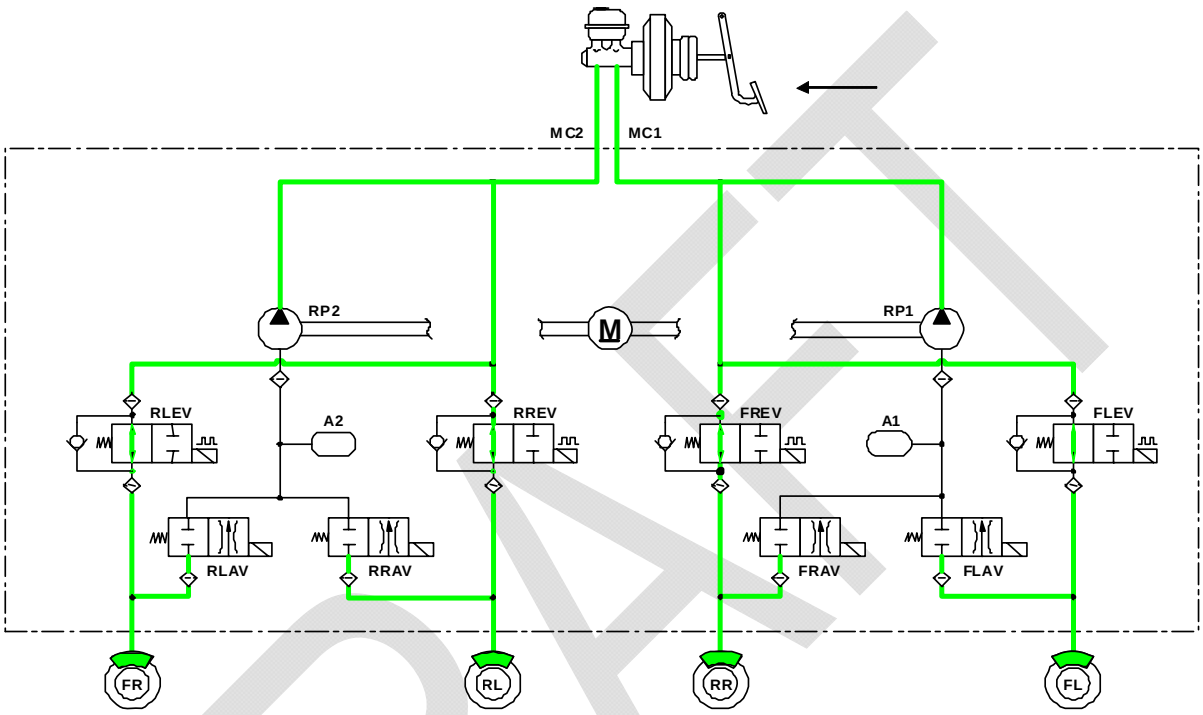

备注:
所有的阀都没有被驱动，进液阀常开，出液阀关闭。通过踩制动踏板，在轮缸处建立与主缸相同的压力。
此项功能用于增压循环。

Remarks:
All valves are not energized, inlet valves normally open, outlet valves normally closed.
The pressure in the callipers, applied by the brake pedal, will be the same as the master cylinder pressure.
This function is used for the pressure increase cycles.

©博世保留商标和专利应用在内的所有权力，未经我公司许可不得复制或传递给第三方。

© All rights with Robert Bosch GmbH, including trademark / patent applications. Any right of disposal, as copying and distribution to third parties is ours.

保压 Function Pressure Maintain (hold function)

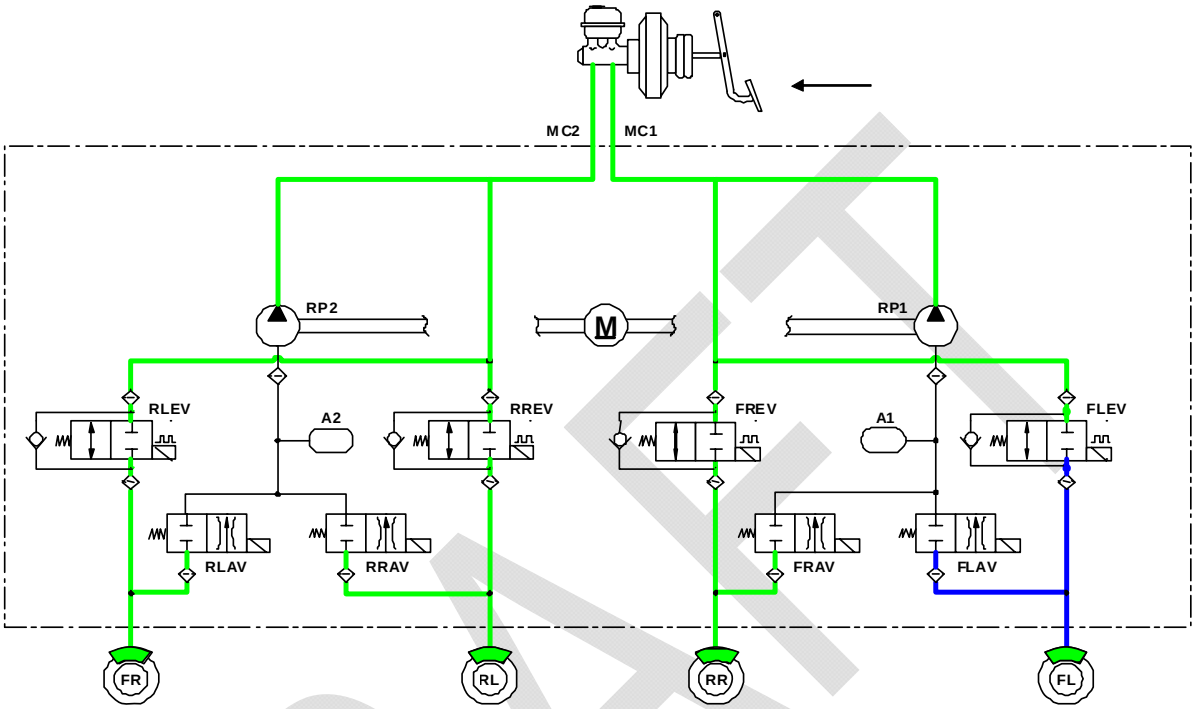

备注:
驱动所有的进液阀（关闭），出液阀保持常闭。
主缸与轮缸的连接被断开。
轮缸处的压力与前一增压或减压循环结束时的压力相等。
在操作者不松开制动踏板的情况下，制动踏板保留在此位置不动。
在操作者施加基础制动之后，通过保压为接下来的 ABS 动态测试做准备。
在增压和减压循环之后，保压功能可以用于避免阀的损坏。

Remarks:
All inlet valves are energized (closed), the outlet valves stays normally closed.
The connection between master cylinder and wheel calliper stays isolated.
The pressure in the callipers will be the same than after the previous increase or decrease cycle.
The brake pedal will stay in this position (operator not to release brake pedal).
This function is used after the base brake apply has been initiated by he operator to keep the pressure constant for the following dynamic ABS test.
It is also used after each pressure increase and release cycle to avoid any damage of the valves.

©博世保留商标和专利应用在内的所有权力，未经我公司许可不得复制或传递给第三方。

© All rights with Robert Bosch GmbH, including trademark / patent applications. Any right of disposal, as copying and distribution to third parties is ours.

减压 Function Pressure Dump (release function)

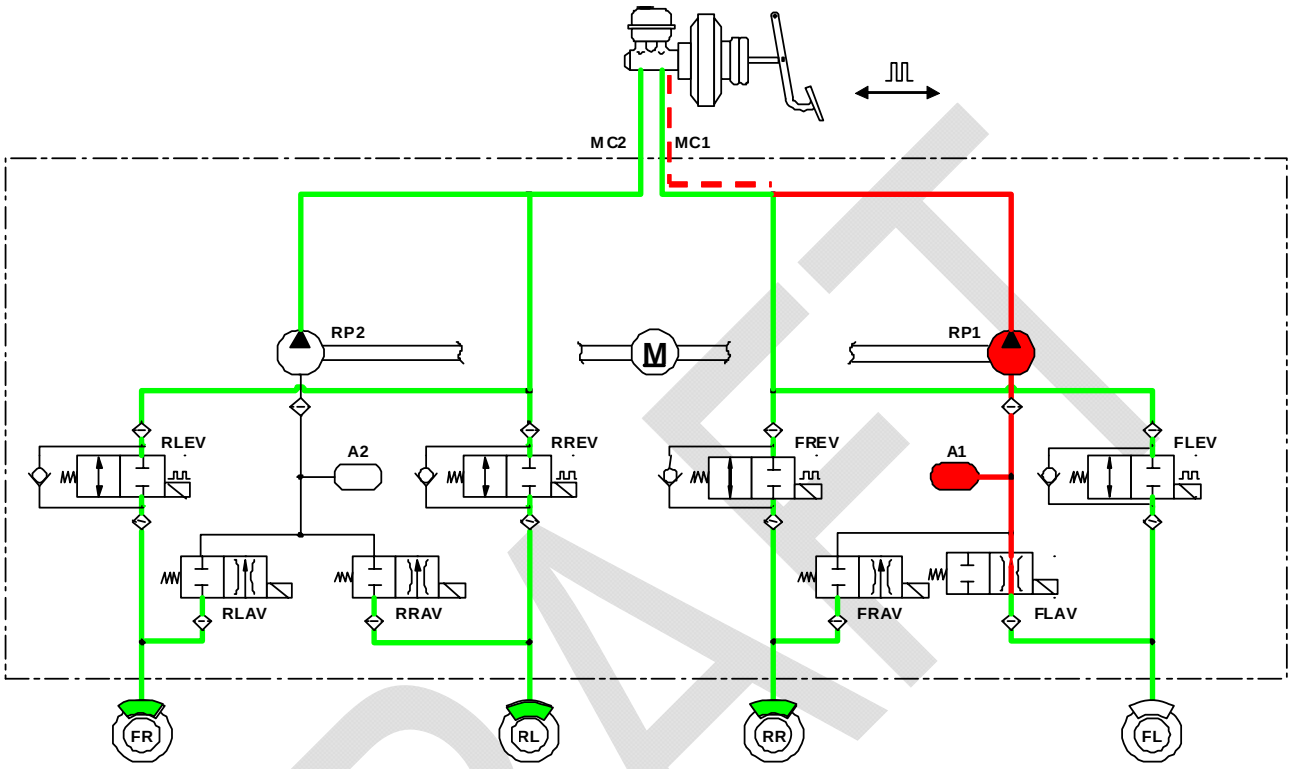

备注:
前左出液阀和所有进液阀都被驱动。关闭所有进液阀，打开前左出液阀。驱动泵电机。
主缸与轮缸的连接被断开。
由于蓄压器吸入制动液，卡钳处的压力降低，然后通过泵将制动液返回到主缸中。
制动踏板将会反弹（踏板反馈）。
此功能用于减压循环。

Remarks:
All inlet valves and the outlet valve FL are energized, all inlet valves are closed, outlet valve FL is opened. The pump motor is activated.
The connection between master cylinder and wheel calliper is isolated.
The pressure in the callipers will be reduced by absorbing the brake fluid in the accumulator and then by recirculation the brake fluid towards the master by the pump.
The brake pedal will move backwards (pedal feedback).
This function is used for the pressure release cycles.

©博世保留商标和专利应用在内的所有权力，未经我公司许可不得复制或传递给第三方。

© All rights with Robert Bosch GmbH, including trademark / patent applications. Any right of disposal, as copying and distribution to third parties is ours.

4 测试步骤和命令描述 Test Step and Commands Description

4.1 建立通讯,进入诊断模式 Communication Set Up and enter to diagnostic mode

诊断功能：建立通讯 Diagnostic Function: Communication Set Up	
服务代码 ServiceIdentifier:	10 H
诊断模式 DiagnosticMode:	03 H
操作员 Operator	测试设备/电子控制单元 Tester / ECU
☞ 关闭点火系统 Turn Ignition OFF ☞ 连接诊断系统 Adapt Diagnostic Link ☞ 打开点火系统 Turn Ignition ON	建立通信 Communication Set Up

肯定的回复 Positive response

服务代码 ServiceIdentifier:	50 H

备注：
参见诊断功能文件确定 ECU 每个字节的定义, 值和范围。以下章节也同样如此。
根据相应的规格，以 CAN 诊断为基础在测试仪和电子控制单元之间建立通信。
在系统通电之后，可以立即起动。
如果未成功建立通信，在测试中断之前应重复大约 3 次。
通信不成功 ⇒ 设置故障信息，继续
通信成功 ⇒ 继续

Remarks:
See ECU data in diagnostic specification for details of byte numbers, values and ranges. The next chapters are same.
The communication set up between the Tester and the ECU is based on the CAN diagnosis according to the corresponding specification.
It can be started immediately after the system is powered up.
In case of a non successful communication set up repeat for about 3 times before the test is interrupted.
Communication not successful ⇒ set failure message, continue
Communication successful ⇒ continue

©博世保留商标和专利应用在内的所有权力，未经我公司许可不得复制或传递给第三方。

© All rights with Robert Bosch GmbH, including trademark / patent applications. Any right of disposal, as copying and distribution to third parties is ours.

4.2 电子控制单元识别 ECU-Identification

诊断功能：读取电子控制单元标志符 Diagnostic Function: ReadECUIdentification	
服务代码 ServiceIdentifier:	1A H
识别选项 IdentificationOption:	B7 H

肯定的回复 Positive response

服务代码 ServiceIdentifier:	5A H
识别选项 IdentificationOption:	B7 H
详见诊断功能描述 Details refer to Functional description of diagnosis	XX … XX

备注：
未知系统 ⇒ 终止测试
正确系统 ⇒ 继续

Remarks:
Unknown System ⇒ Abort Test
System detected ⇒ Continue

4.3 读取故障码 Read Fault Code Memory

诊断功能：读取故障码 Diagnostic function: ReadDiagnosticInformation	
服务代码 ServiceIdentifier:	12 H
故障码状态 StatusOfDTC:	01 H

肯定的回复 Positive response

服务代码 Service Code:	52 H
FailureRecordStructureIdentifier	01 H
PacketIdentifier	00 H

©博世保留商标和专利应用在内的所有权力，未经我公司许可不得复制或传递给第三方。

© All rights with Robert Bosch GmbH, including trademark / patent applications. Any right of disposal, as copying and distribution to third parties is ours.

DataPacketIdentifier	01 H
详见诊断功能描述 Details refer to Functional description of diagnosis	XX H
	XXH
	XXH
	XXH ....

备注：
ECU 输出所包含的所有故障码，数据包括几种信息。最大存储个数是 10 个，输出的和实际存在的个数相等。
输出数据应评估：
- 故障码个数
- 故障码状态
测试设备应能输出故障码并报文，只有永久故障码存在才能取消测试，历史故障码应被忽略。
当前故障码 ⇒ 取消测试
无当前故障码 ⇒ 继续（忽略历史故障码）

Remarks:
The ECU outputs the content of the entire fault code memory. This data include several informations. The maximum number of stored faults is 10. The number of the transmitted fault codes is equal to the number of stored fault codes.
Out of the transmitted data, the following must be evaluated:
- Fault code number (DTC)
- The status of DTC
The tester has to evaluate the fault code data, to transform the number into a failure text and to issue a protocol.
Only permanent faults will lead to abort the test cycle. History faults must be ignored.
Current fault present ⇒ Abort test
No current fault present ⇒ Continue (Ignore faults)

情形：Conditions:
根据 ECE13 的规定，轮速传感器的故障有可能在前一工位的操作中存储并以当前故障码形式存在，因此所有的轮速传感器故障（当前的历史的）在评估中均应忽略，下一步将在轮速传感器的测试中进行检测。
Due to the ECE13-Regulation, wheel speed sensor faults that may have been stored in the ECU by previous assembly equipment will stay stored as current faults. Therefore, all wheel speed sensor (current and history) must be ignored during the evaluation. These faults will be detected in test step “wheel speed sensor test”.

©博世保留商标和专利应用在内的所有权力，未经我公司许可不得复制或传递给第三方。

© All rights with Robert Bosch GmbH, including trademark / patent applications. Any right of disposal, as copying and distribution to third parties is ours.

4.4 检查字节 Check Byte

诊断功能：检查加注字节 Diagnostic Function: CheckProcessByte	
服务代码 ServiceIdentifier:	1A H
局部代码 DataPacketIdentifier (DPID):	XX H

肯定的回复 Positive response

服务代码 ServiceIdentifier:	5A H
局部代码 DataPacketIdentifier (DPID):	XX H
状态 Status(基于 GM 字节机制):	XX XX XX XX XX H

例如：Example:

备注：
加注字节识别先前的在线真空加注或离线排气是否正确运行。
在转毂处评估过程自节的前提是排气设备具有写入字节的功能。

当前码不正确 ⇒ 取消测试
当前码正确 ⇒ 继续

Remarks:
The process control byte identifies whether the previous on line evacuate/fill process or the off line repair bleed process has been executed correctly.
The precondition to evaluate the process control byte at the end of line tests must be that the repair bleed equipment has the capability to write the process byte.
The tester writes the process control byte after the evacuation and fill or the repair bleed process. With finishing of the ROM resident functions at the end of the fill or repair bleed cycle the tester checks the valve relay status and if the status not disabled and the evac/fill or repair bleed process has been executed correct, the tester writes the process control byte to the value “AA Hex”. This value indicates a complete successful evacuation and fills process.
If there was a problem while the evac/fill or repair bleed process and the ROM resident routine early interrupted the tester write the value “00 Hex” This value indicates filling in not complete.
If the process conclude, but there was a problem the tester write the value “EE Hex” This value indicates filling in complete and NOK. Delivery status of the Bosch plant is “FF Hex”.
Process byte incorrect ⇒ Abort Test
Process byte correct ⇒ Continue

©博世保留商标和专利应用在内的所有权力，未经我公司许可不得复制或传递给第三方。

© All rights with Robert Bosch GmbH, including trademark / patent applications. Any right of disposal, as copying and distribution to third parties is ours.

4.5 检查系统状态 Check System Status

检查泵马达、系统继电器状态 Check pump motor and valve relay status

诊断功能：读取数据 ReadDataByPacketIdentifier request service	
服务代码 ReadDataByPacketIdentifier request service ID	**22 H**
局部代码 SendOneResponse	**40 H**
DPID 码 DataPacketIdentifier (DPID)	**6C H**

肯定的回复 Positive response

服务代码 DataPacketIdentifiers	62 H				
局部代码 Checkback 0	40 H				
数据值 Checkback 1	2C H				
数据值 Checkback 2	02 H				
	ECU-Data:	**Status:**	**Demand Value:**	**Existing Value:**	**Operator:**
Checkback 1 **Checkback 2**	**Pump motor status** **System relay status**	**off** **on**	**02 H**	**XX H**	+

备注：
应通过检测软件的数值范围来校验 ECU 的数据。
在人机界面上应有相应的测试动作提示。
数据正确 ⇒ 继续
数据不正确 ⇒ 置错误信息，继续

Remarks:
The ECU data must be verified with the limit data of the tester software.
The operator prompts should be shown on the display.
Data correct ⇒ Continue
Data not correct ⇒ Failure message, continue

©博世保留商标和专利应用在内的所有权力，未经我公司许可不得复制或传递给第三方。

© All rights with Robert Bosch GmbH, including trademark / patent applications. Any right of disposal, as copying and distribution to third parties is ours.

4.6 禁用速度限制和阀组继电器关闭 Speed limited and Valve relay shut down deactivation

禁用速度限制 Speed limited deactivation

诊断功能：禁用速度限制 Diagnostic Function: Speed limited deactivation	
服务代码 ServiceIdentifier:	AE H
局部代码 LocalIdentifier:	17 H
控制状态 ControlStatus:	03 H
局部代码 LocalIdentifier:	13 H
局部代码 LocalIdentifier:	14 H
局部代码 LocalIdentifier:	C0 H
局部代码 LocalIdentifier:	00 H

肯定的回复 Positive response

服务代码 ServiceIdentifier:	EE H
局部代码 LocalIdentifier:	17 H

注意:禁用速度限制和阀组继电器关闭功能仅在安全模式下可实现！
Caution：Speed limited and Valve releay shut down deactivation only work with DVT unlocked!

DRAFT

©博世保留商标和专利应用在内的所有权力，未经我公司许可不得复制或传递给第三方。

© All rights with Robert Bosch GmbH, including trademark / patent applications. Any right of disposal, as copying and distribution to third parties is ours.

4.7 评估轮速传感器测试 Evaluation of the Wheel Speed Sensor Test

诊断功能：轮速数据需求 Diagnostic Function: RequestRoutineResultsByLocalIdentifier - WSS Test	
服务代码 ServiceIdentifier:	22H
局部代码 LocalIdentifier:	40H
控制选项 ControlOption:	5XH

说明/Note： X 选项如下/ X option as below:

51->LF
52->RF
53->RR
54->LR

肯定的回复 Positive response

服务代码 ServiceIdentifier:	62 H
局部代码 LocalIdentifier:	40 H
执行状态 RoutineStatus:	5X H
轮速值 Speed:	XX H

说明/Note： X 选项如下/ X option as below:

51->LF
52->RF
53->RR
54->LR

备注：
所有反馈数据（每个轮）必须评估。
Remarks:
All result data of the ECU (Each wheel) must be evaluated.

©博世保留商标和专利应用在内的所有权力，未经我公司许可不得复制或传递给第三方。

© All rights with Robert Bosch GmbH, including trademark / patent applications. Any right of disposal, as copying and distribution to third parties is ours.

4.8 ABS 动态测试 Dynamic Test of ABS

诊断功能：开始执行程序 Diagnostic Function: StartRoutineByLocalIdentifier							
服务代码 ServiceIdentifier:				AEH			
局部代码 LocalIdentifier:				01 H			
Operator push brake pedal constant							
1	Pump motor on						
Data bytes	AE H	01 H	03 H	00 H	00 H	00 H	01H
2	All inlet valves on						
Data bytes	AE H	01 H	03 H	55 H	00 H	00 H	01H
3	Pressure release of all wheels, all outlet valves on						
Data bytes	AE H	01 H	03 H	FF H	00 H	00 H	01H
4	All outlet valves off						
Data bytes	AE H	01 H	03 H	55 H	00 H	00 H	01H
5	Pressure increase pulse FL						
Data bytes	AE H	01 H	03 H	54 H	00 H	00 H	01H
6	All inlet valves on						
Data bytes	AE H	01 H	03 H	55 H	00 H	00 H	01H
7	Pressure decrease pulse FL						
Data bytes	AE H	01 H	03 H	57 H	00 H	00 H	01H
8	All outlet valves off						
Data bytes	AE H	01 H	03 H	55 H	00 H	00 H	01H
9	Pressure increase pulse FR						
Data bytes	AE H	01 H	03 H	51 H	00 H	00 H	01H
10	All inlet valves on						
Data bytes	AE H	01 H	03 H	55 H	00 H	00 H	01H
11	Pressure decrease pulse FR						
Data bytes	AE H	01 H	03 H	5D H	00 H	00 H	01H

©博世保留商标和专利应用在内的所有权力，未经我公司许可不得复制或传递给第三方。

© All rights with Robert Bosch GmbH, including trademark / patent applications. Any right of disposal, as copying and distribution to third parties is ours.

12	All outlet valves off						
Data bytes	AE H	01 H	03 H	55 H	00 H	00 H	01H
13	Pressure increase pulse RR						
Data bytes	AE H	01 H	03 H	45 H	00 H	00 H	01H
14	All inlet valves on						
Data bytes	AE H	01 H	03 H	55 H	00 H	00 H	01H
15	Pressure decrease pulse RR						
Data bytes	AE H	01 H	03 H	75 H	00 H	00 H	01H
16	All outlet valves off						
Data bytes	AE H	01 H	03 H	55 H	00 H	00 H	01H
17	Pressure increase pulse RL						
Data bytes	AE H	01 H	03 H	15 H	00 H	00 H	01H
18	All inlet valves on						
Data bytes	AE H	01 H	03 H	55 H	00 H	00 H	01H
19	Pressure decrease pulse RL						
Data bytes	AE H	01 H	03 H	D5 H	00 H	00 H	01H
20	All outlet valves off						
Data bytes	AE H	Data bytes	AE H	Data bytes	AE H	Data bytes	AE H
Operator release the brake padel							
21	Pump motor close after 2 sec						
Data bytes	AE H	01 H	03 H	00 H	00 H	00 H	00H

备注：
电机自始至终都在动作。操作者得预先定义经验值的制动力，然后测试设备关闭所有进液阀保持压力，这一步是测试基础制动系统。然后所有出液阀开启，释放压力。动态测试执行在每个轮子上的压力的释放和增加的循环。为了减少时间，轮子的控制可以是重叠进行的。关闭所有进液阀后电机还要运行 2 秒，目的是排空蓄能器。
在压力增加和压力减少的循环中使用固定的时间以便进行数值的测量。
所有的动作均应通过试验确定。可进行多次脉冲增压循环。

Remarks:
The pump motor runs from the beginning to the end of the entire test. The operator has to achieve a sufficient brake force, than the tester set all inlet valves to pressure hold. This test step is for the execution of the base brake test. After the base brake test all outlet valves will be switch on and off to release the locked pressure.

©博世保留商标和专利应用在内的所有权力，未经我公司许可不得复制或传递给第三方。

© All rights with Robert Bosch GmbH, including trademark / patent applications. Any right of disposal, as copying and distribution to third parties is ours.

Then the dynamic test will be started with pressure release and increase cycles at the once wheels.
In order to minimize the test time, the wheel cycles of the axles can be overlapped. Switch all inlet valves off as well as the pump motor after 2000ms. This delay time is needed to discharge the accumulator chamber.
Between the pressure increases and pressure releases cycles must be a stabilization time before the force values can be measured.
All activation times should be defined by trials. The pressure increase cycles can be realized with multi- pulse.

4.9 写入过程控制字节 Write Process Control Byte

诊断功能：写入字节 Diagnostic function: WriteDataByLocalIdentifier	
服务代码 ServiceIdentifier:	3B H
记录局部代码 RecordLocalIdentifier:	B2 H
状态 Status:	XX XX XX H

肯定的回复 Positive response

服务代码 ServiceIdentifier:	7B H
记录局部代码 RecordLocalIdentifier:	XX XX XX H

例如：Example:

备注：
详参见诊断功能文件确定 ECU 数值。
电子控制单元用预定义的程序字节“FF 十六进制”送到客户的装配线。该号码被博世保留，以防一个不成功的通讯该数据将还保留在电子控制单元的电可擦除可编程只读存储器中。（“不正确”）。
在成功的下线检测情形下，将写入客户定义的数值，该数值应得到测试软件的校验。
下面的错误将导致系统关闭：阀错误，阀继电器错误，电机及其继电器错误
数据正确 ⇒ 继续
数据错误 ⇒ 故障信息，继续

Remarks:
See ECU data in diagnostic specification for more details.
The ECU is shipped to the customers' assembly line with a predefined process byte: “FF Hex”. In case of a non successful communication this data will still stay in the EEPROM of the ECU (“incorrect“).
In case of a successful EOL process the value will be changed in a defined value of the customer. The ECU data must be verified with the limit data of the tester software.
Following failures lead to a shut down of the system: all valve faults, VR fault, RFP and MR faults.
Data correct ⇒ Continue
Data not correct ⇒ Failure message, continue

©博世保留商标和专利应用在内的所有权力，未经我公司许可不得复制或传递给第三方。

© All rights with Robert Bosch GmbH, including trademark / patent applications. Any right of disposal, as copying and distribution to third parties is ours.

4.10 清除故障码 Clear Fault Code Memory

诊断功能：清除故障码 Diagnostic function: ClearDiagnosticInformationRequest	
服务代码 ServiceIdentifier:	04 H

肯定的回复 Positive response

服务代码 ServiceIdentifier:	44 H

备注：
在下线检测完成之后，不应有当前故障码的存在。如果有当前故障码，必须清除。然后重复下线检测，直到车辆没有错误发生。
Remark:
At the end of the test the fault codes are erased to ensure that there is no code stored in the ECU after the vehicle leaves the assembly plant. The ECU erases the entire data of the fault code memory. This will take about several seconds execution time. The tester repeats the function “Read Fault Code Memory” again for verification of the correct function of clearing the memory.

4.11 结束测试 End of Test

诊断功能：终止诊断 Diagnostic Function: StopDiagnosticSession	
服务代码 ServiceIdentifier:	20 H

肯定的回答 Positive Response

服务代码 ServiceIdentifier:	60 H

DRAFT

©博世保留商标和专利应用在内的所有权力，未经我公司许可不得复制或传递给第三方。

© All rights with Robert Bosch GmbH, including trademark / patent applications. Any right of disposal, as copying and distribution to third parties is ours.

5 阀保护措施 Valve protective measures

ABS 8	
Valves:	**EOL routines (diagnostic mode)**
EV 4,3 Ω	The voltage is limited internal to 10V
	Up and down counter with a ratio up/down = 2/1; limited to 30s
AV 4,3 Ω	Up and down counter with a ratio up/down = 2/1; limited to 30s

备注：
在使用只读存储器常驻程序“下线检测”的条件下，所有的阀保护措施自动启用。不能禁用这些保护措施。
博世建议使用该只读存储器固化功能，以免由于过热而导致阀损坏。
出液阀和进液阀只在特殊的情形下可以开到100%，一般建议低于100%启动。

Remarks:
All valve protective measures automatically active with using of the ROM resident routines “EOL test”. These protective measures cannot be disabled.
Bosch recommends to use this ROM resident functions to avoid any damages at the valves caused by over-heating.
The outlet and inlet valves must be actuated with 100% duty cycle only in special applications it is possible to actuate the valves with less than 100%.

DRAFT

©博世保留商标和专利应用在内的所有权力，未经我公司许可不得复制或传递给第三方。

© All rights with Robert Bosch GmbH, including trademark / patent applications. Any right of disposal, as copying and distribution to third parties is ours.

6 测试设备信息 Test Rig Information

测功机设计：
该测试可在 4 个独立的转毂上进行。

诊断信息：
诊断电脑和车辆应尽可能的接近，以避免出现任何通讯故障。
为了减少测试时间，消息之间以及消息内部字节之间的时间间隔应尽可能地接近最小可能值。
所有其他的诊断信息和功能都需根据客户要求决定。

标志字节：
抽真空加注的标志字节必须有客户或其抽真空加注/人工排气设备的供应商确定。

轮速传感器测试：
在检查轮速传感器相关性时，如果有可能，通过设置不同的时间延迟使每个车轮在不同的时间开始转动。

阀动态测试：
为了最小化整个测试时间，减压/增压循环可以重叠。

编辑菜单：
在生产过程中，由于软件的升级，可能需要修改 ECU 的识别码，所以编辑菜单的设置对于修改识别码非常重要。
阀的动态测试时间设置必须通过试验尝试确定。
阀的动作循环时间设置，例如执行时间和稳定时间，必须包含在编辑菜单中。
为了简单的修改，编辑菜单中同样需要包含待评估数据的上、下限值。

车辆型号（车重，长短轴局，车身型号）：
由于存在各种不同型号和结构的车辆，在 ABS 动态测试的电磁阀工作循环过程中，可能需要不同的执行次数。这些数据必须存在测试设备的单独参数文件中，并且易于通过编辑菜单修改。当进入测试设备时，应该通过条形码或者操作者的选择完成车辆型号的选择。

测试协议：
如果实验结果正确，打印“测试通过”。
如果测试结果不良，必须打印失败结果。
失败结果必须包括测试失败步骤的所有测试数据以便于原因分析。
必须按要求提供所有实验结果的测试协议。

车辆状态：
为了向系统充分供电，蓄电池必须完全充电。为了保持供电正常，发动机可保持工作。

Dynamometer design:
The test is designed to be performed on a roller dynamometer.
To allow individual wheel test cycles the rolls of each wheel should be independently driven by the test rig drives.

Diagnostic Information:
The diagnostic computer should be as close as possible near the vehicle to avoid communication problems.

©博世保留商标和专利应用在内的所有权力，未经我公司许可不得复制或传递给第三方。

© All rights with Robert Bosch GmbH, including trademark / patent applications. Any right of disposal, as copying and distribution to third parties is ours.

The timing (time gaps between messages and bytes within messages) should be set close to the minimum possible limits in order to reduce the test time.
All other additional diagnostic information and functions is customer specific.

Process Byte:
The final definition of the process byte data must be taken from the supplier of the evac/fill- and repair bleed equipment or the customer.

Wheel Speed Sensor Test:
The correlation check is executed by starting the individual rolls with a delay between each wheel if possible.

Dynamic Valve Tests:
To minimize the entire test time, the pressure release / increase cycles can be overlapped.

Editor menus:
ECU Identification codes may change during production due to updates of software revisions.
It is important to set up the software program to modify identification numbers easily by using an editor menu.
The timing of the dynamic valve test must be found during test trials.
Timing of valve actuation cycles, such as actuation times and stabilization times should be included in an editor menu.
Upper and lower limit values for evaluation should also be included in an editor menu for simple adaptation or modifications.

Vehicle Types (weight, long wheel base, short wheel base, body type):
Due to the various vehicle types and configurations, different actuation times for the valves cycles of the dynamic ABS test might be required. These data should be available in separate parameter file within the test equipment software and also easily be modified by using an editor menu.
The selection of the vehicle type should be done by either a bar code reading or an operator selection when driving into the test rig.

Test protocol:
In case of an OK test result, a print out (”test passed”) is made.
In case of a NOK test result, a failure protocol must be printed out.
This protocol must include all test data of the test step that failed in order to allow a better failure analysis.
An entire test protocol of all test results must be available on request.

Vehicle conditions:
The battery must be charged properly in order to allow a sufficient power supply to the system.
The engine can be running in order to apply a sufficient power supply.

DRAFT

©博世保留商标和专利应用在内的所有权力，未经我公司许可不得复制或传递给第三方。

© All rights with Robert Bosch GmbH, including trademark / patent applications. Any right of disposal, as copying and distribution to third parties is ours.

7 附件 Attachments

7.1 ABS 8 II 型回路液压图 ABS 8 with II brake split circuit Hydraulic Circuit Diagrams

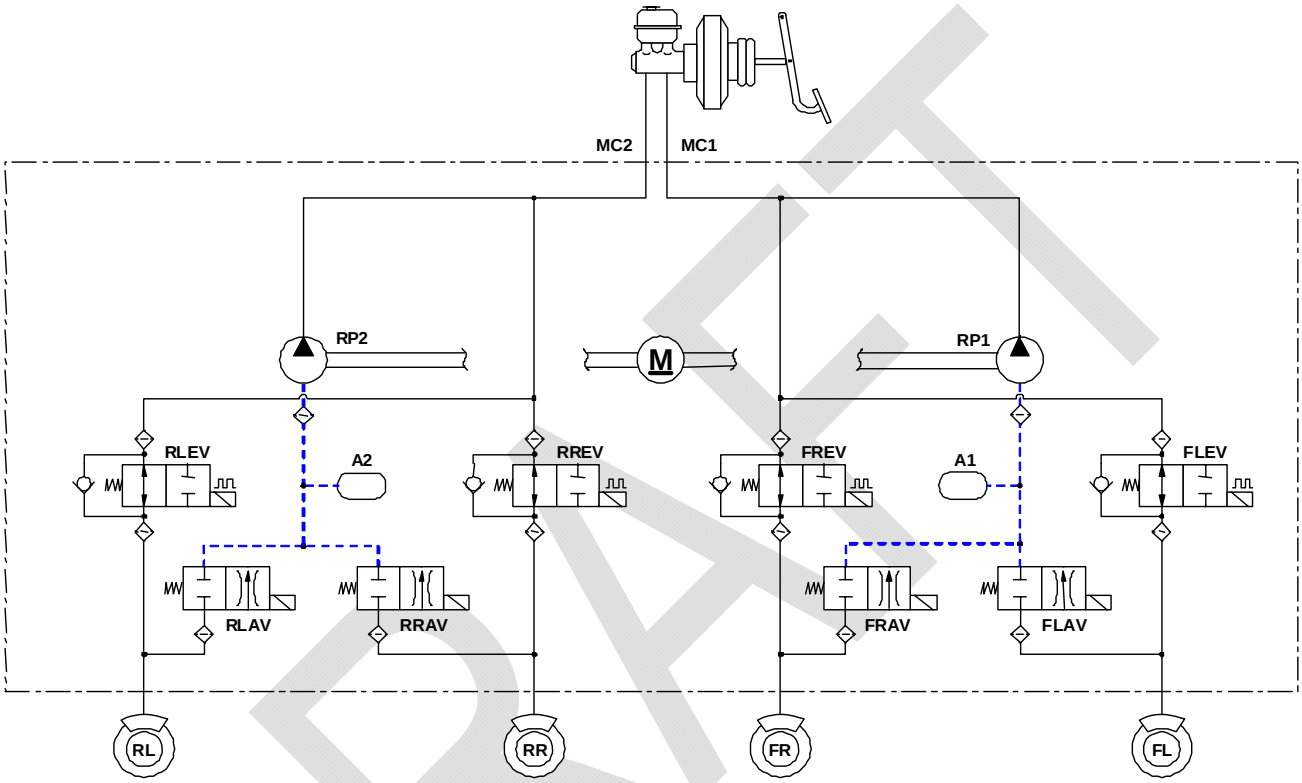

备注：图中虚线部分为第二回路，其他部分为第一回路。
Remarks: Secondary circuit are marked with dash line in diagrams, the others are all primary circuit.

©博世保留商标和专利应用在内的所有权力，未经我公司许可不得复制或传递给第三方。

© All rights with Robert Bosch GmbH, including trademark / patent applications. Any right of disposal, as copying and distribution to third parties is ours.

7.2 SGMW GP50 ABS 8 电路图 SGMW GP50 ABS 8 Wiring Diagrams

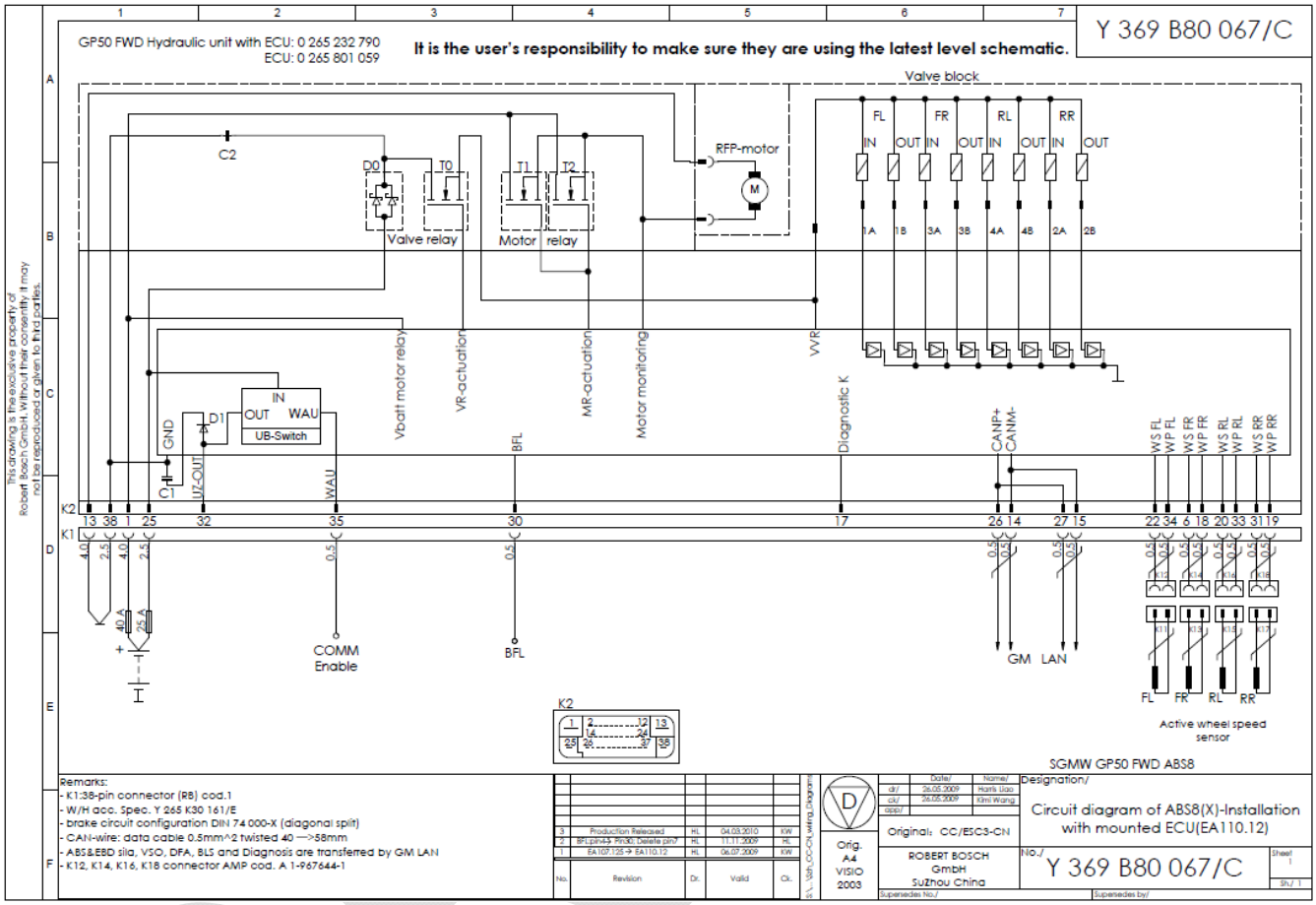

©博世保留商标和专利应用在内的所有权力，未经我公司许可不得复制或传递给第三方。

© All rights with Robert Bosch GmbH, including trademark / patent applications. Any right of disposal, as copying and distribution to third parties is ours.